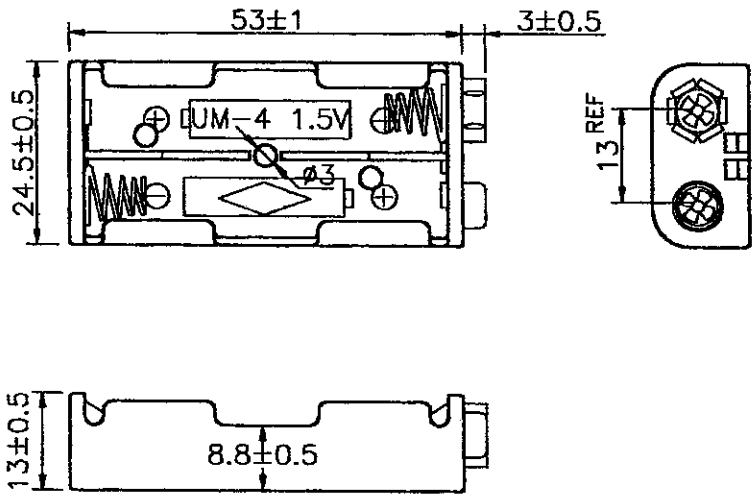


SPECIFICATION

(1)ITEM NO.: BH-421B6

(2)WITH 6 PRONG SNAP TERMINAL

(3)MATERIAL: P.P. RESIN, BLACK COLOR

(4)SPRING: 0.6MM 65C SPRING WIRE

| NO. | MODIFICATION | DATE |
|---|---|---|
| 3 | | |
| 2 | | |
| 1 | | |

THIRD ANGLE PROJETION

| | |
|---|---|
| SCALE | 1:1 |
| UNIT | MM |
| MAT'L | P.P. |
| DATE | 99.DEC.22 |

**SHOGYO INTERNATIONAL CORP.**

**#BH-421B**

**BATTERY HOLDER**