客戶 CUSTOMER'S NAME		承認	審核	製作
名稱 MODEL	客戶機種名稱 CUSTOMER'S NO.			
	本廠機種名稱 OUR MODEL NO. GC0401KBF			

1	口徑 NOMIMAL SIZE	40.1x28.6x11.2H mm.	inch.
2	公稱阻抗 IMPEDANCE	8 Ω± 15%	at. 1K Hz. 1 V.
3	最低共振週波數 RESONANCE FO	430 Hz.± 86 Hz.	FO Hz. 1 V.
4	出力音壓 S.P. LEVEL	87 dB/w± 3 dB	1 w 50 cm average at
5	出力音壓週波數特性 RESPONSE	Fo Hz~ 20K Hz MAX 10 dB	600,800,1K,1.2K Hz.
6	交叉週波數 CROSSOVER FREQ.	Hz Hz	dB/OCT Net work
7	許容入力 INPUT POWER	定格入力 Nominal input 1 w.	最大入力 Handling Capacity 2 w.
8	動作 OPERATION	Must be normal at program source 1 w.	
9	聲音異常 BUZZ. RATTLE, ETC.	Must be normal at Since Wave 2.83 V.	
10	磁束密度 FLUX DENSITY	Gauss±10%	
11	總磁束 TOTAL FLUX	Max well min	
12	磁鐵 MAGNET	Size 12.5 x 2 mm gr	oz
13	重量 TOTAL WEIGHT	gr	oz
14	連續負荷 LOAD TEST	After test meet Item 9 and 10 White noise 1 W.	96 Hours
15	失真率 DISTORTION	以內 % MAX Hz W.	
16	耐熱性 HEAT TEST	After test meet Item 9 and 10 60±2 ±°C 20-50 %R. H	96 Hours
17	耐濕性 HUMIDITY TEST	After test meet Item 9 and 10 40+2 ±°C 90-95 %R. H	96 Hours

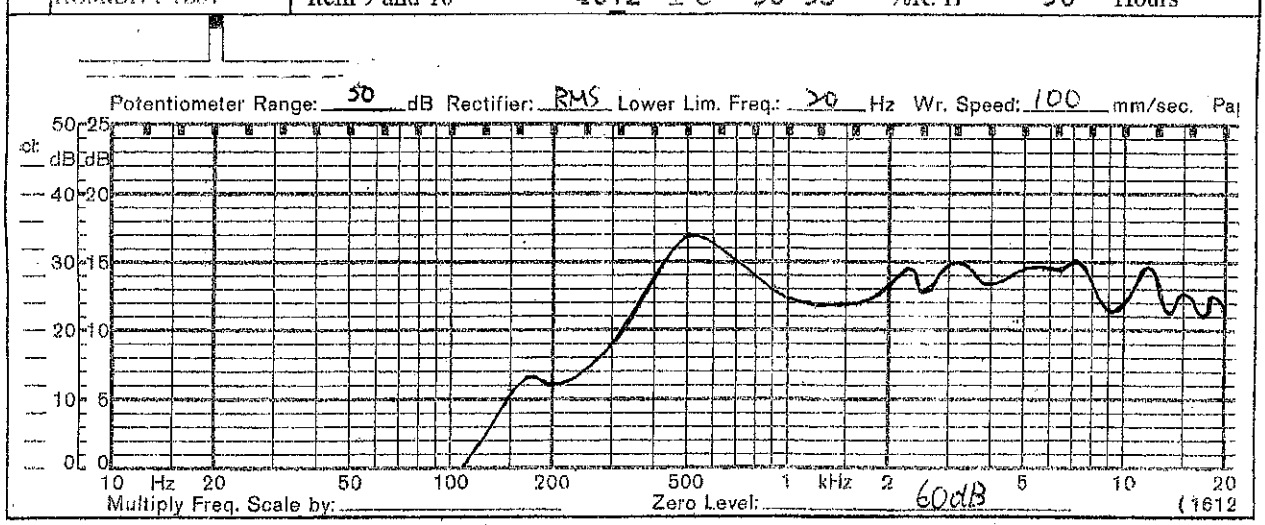

SHOGYO

SHOGYO INTERNATIONAL CORP.
6851 JERICHO TURNPIKE, SYOSSET, N.Y. 11791
TEL: (516) 921-9111 • FAX: (516) 921-3777
www.shogyo.com

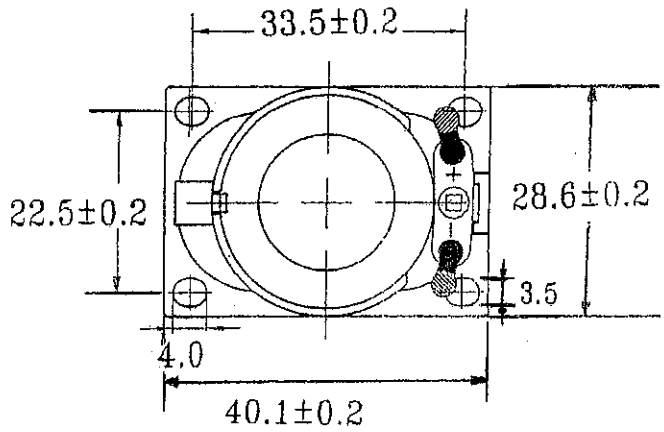

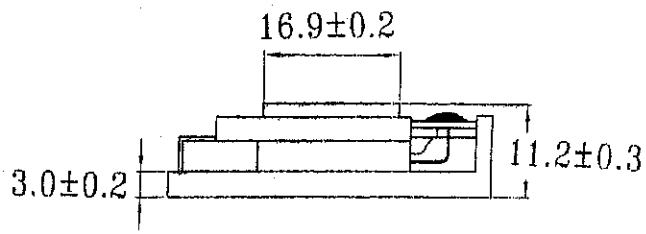

APPROVED	CHECKED	DRAWING	CUSTOMER'S PART NO.
			GC0401KBF

SHOGYO

SHOGYO INTERNATIONAL CORP.
6851 JERICHO TURNPIKE, SYOSSET, N.Y. 11791
TEL: (516) 921-9111 • FAX: (516) 921-3777
www.shogyo.com