SPEAKER SPECIFICATION

客戶 CUSTOMER'S NAME		承認	審核	製作
名稱 MODEL	客戶機種名稱 CUSTOMER'S NO.			
	本廠機種名稱 OUR MODEL NO. GF0779TVX (ROHS)			

1	口徑 NOMIMAL SIZE	77 mm. 3″ inch.	
2	公稱阻抗 IMPEDANCE	8 Ω± 15%	at. 800 Hz. 1 V.
3	最低共振週波數 RESONANCE FO	150 Hz.± 30 Hz.	FO Hz. 1 V.
4	出力音壓 S.P. LEVEL	94 dB/w± 3 dB	1 w 50 cm average at
5	出力音壓週波數特性 RESPONSE	Fo Hz~ 18K Hz	1K, 1.4K, 1.7K, 2K Hz.
6	交叉週波數 CROSSOVER FREQ.	Hz Hz	dB/OCT Net work
7	許容入力 INPUT POWER	定格入力 Nominal input 6 w.	最大入力 Handling Capacity 10 w.
8	動作 OPERATION	Must be normal at program source 6 w.	
9	聲音異常 BUZZ. RATTLE, ETC.	Must be normal at Since Wave 6.92 V.	
10	磁束密度 FLUX DENSITY	Gauss±10%	
11	總磁束 TOTAL FLUX	Max well min	
12	磁鐵 MAGENET	Size 60 X 32 X 8 mm gr oz 45 X 22 X 8	
13	重量 TOTAL WEIGHT	gr oz	
14	連續負荷 LOAD TEST	After test meet Item 8 and 9 White noise 6 W. 24 Hours	
15	失真率 DISTORTION	以內 % MAX Hz W.	
16	耐熱性 HEAT TEST	After test meet Item 8 and 9 60+2 ±°C 20-50 %R. H 24 Hours	
17	耐濕性 HUMIDITY TEST	After test meet Item 8 and 9 40+2 ±°C 90-95 %R. H 24 Hours	

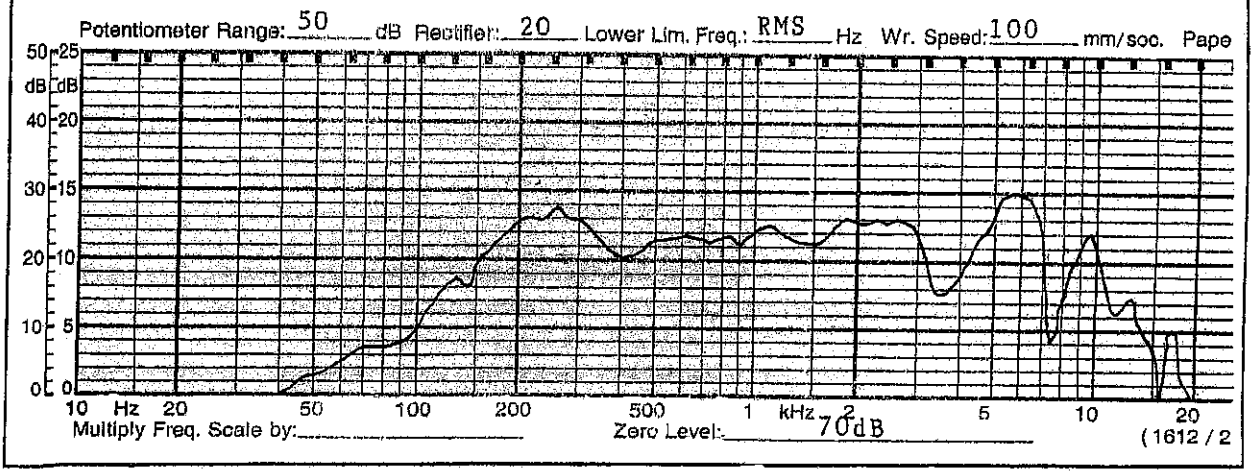

SHOGYO

SHOGYO INTERNATIONAL CORP.
6851 JERICHO TURNPIKE, SYOSSET, N.Y. 11791
TEL: (516) 921-9111 • FAX: (516) 921-3777
www.shogyo.com

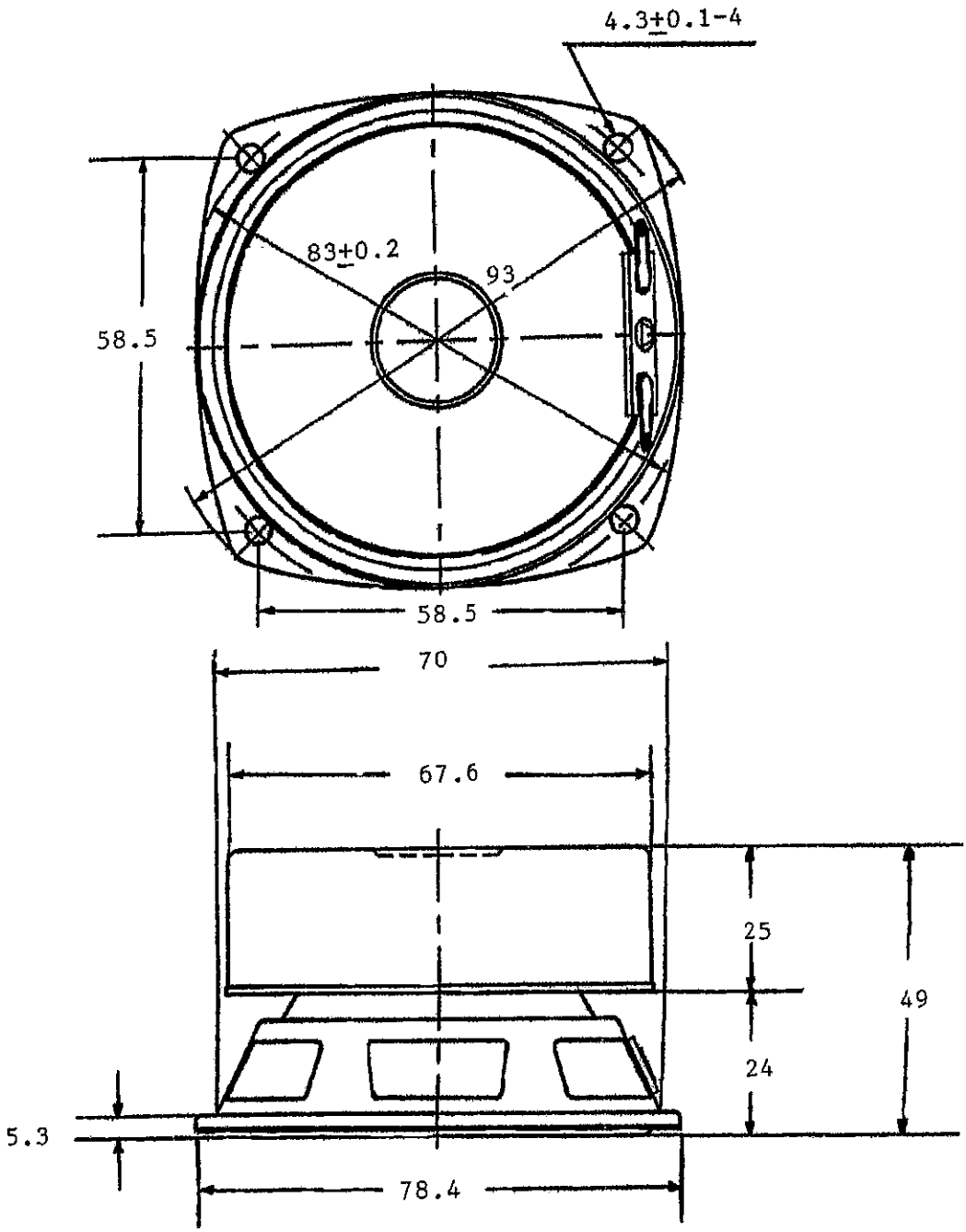

TOLERANCE: ±0.8 M/M

APPROVED	CHECKED	DRAWING	
			GF0779TVX

SHOGYO

SHOGYO INTERNATIONAL CORP.
6851 JERICHO TURNPIKE, SYOSSET, N.Y. 11791
TEL: (516) 921-9111 • FAX: (516) 921-3777
www.shogyo.com