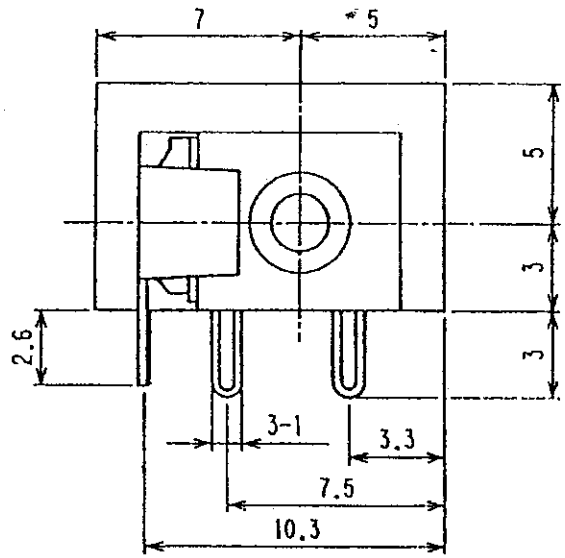


## SPECIFICATIONS

1. RATING: 12V DC 1A
2. CONTACT RESISTANCE: 30mΩ MAX.
3. DIELECTRIC STRENGTH: 500V AC FOR 1MINUTE.
4. INSULATION RESISTANCE: 100MΩ MIN. 500V DC.

| | φA |
|---|---|
| MJ197P | $\phi 2.35^{+0.05}_{-0}$ |

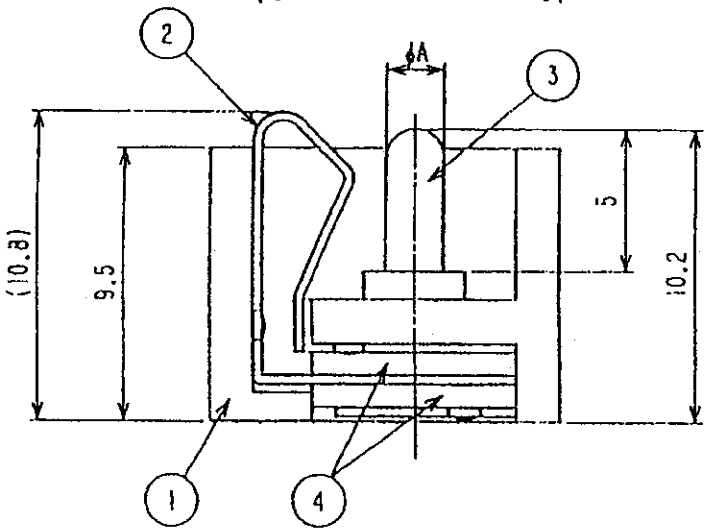


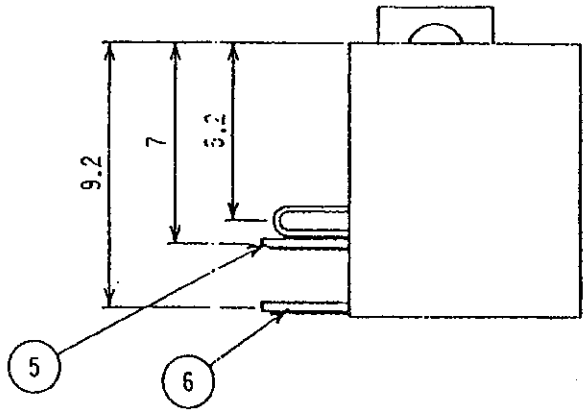


HOLE LAYOUT
(BOTTOM VIEW)

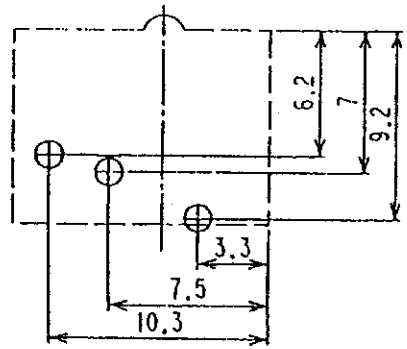


| LET | PART NAME | MATERIAL | QTY | FINISH | NOTE |
|---|---|---|---|---|---|
| 6 | TERMINAL C | BSR | 1 | Ag | |
| 5 | TERMINAL B | BSR | 1 | Ag | |
| 4 | INSULATOR | PF | 2 | | |
| 3 | CENTER PIN | BSBM | 1 | NI | |
| 2 | TERMINAL A | FAB-EH | 1 | Ag | |
| 1 | BODY | PBT | 1 | | |

| TOLERANCE | SCALE | DATE |
|---|---|---|
| ±0.3 | 4/1 | 4/1/17 |

MATERIAL
材質 PBT G30%

FINISH
処理

**SHOGYO INTERNATIONAL CORP.**

**# MJ-197P**