SCHEMATIC	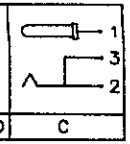
MODEX NO	C

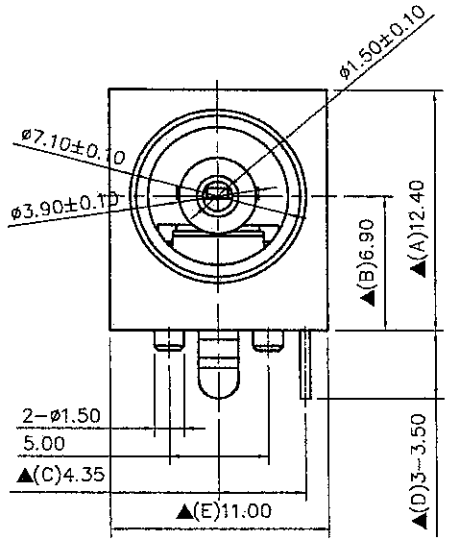

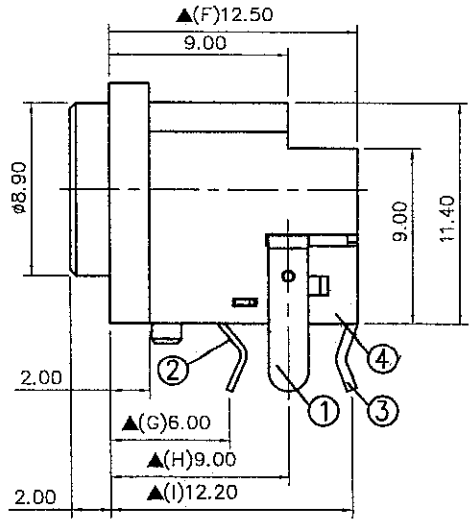

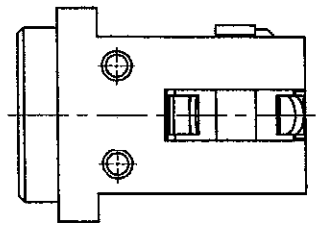

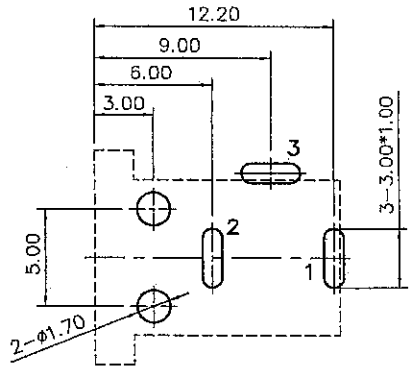

Pin Hole Layout
(Jack Bottom View)

NO.	Description	Material	Q'TY	Finish
4.	Housing	PBT	1	Black Color
3.	Break Terminial	0.5T Bronze	1	Silver Plated
2.	Ping Spring	0.3T Phoshpor Bronze	1	Silver Plated
1.	Pin Terminal	0.5T Bronze	1	Silver Plated

DATE	DWN	CHKD	APVD	MANAGER
10.25.2012				

PART NAME : DC POWER JACK

VERSION:6.0

TOLERANCE :±0.3mm UNLESS OTHERWISE SPECIFIED

UNIT:mm

SCALE:1/1

RoHS Compliant

For Reference
僅供參考

SPECIFICATIONS:
Contact Resistance : 30mΩ max
Current Rating : Max 5.0A ,24V DC
Insulation Resistance : 100MΩ min. at DC 500V
Dielectric Withstanding Voltage: AC 500V for one minute
Remark: ▲: The Most Important Dimension

SHOGYO INTERNATIONAL CORP.

#SCD461JCS000B00G