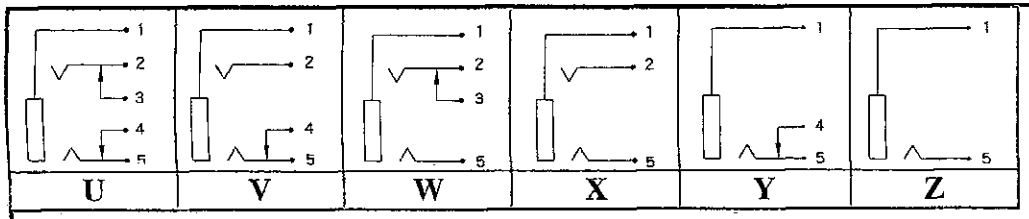

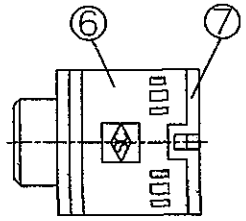

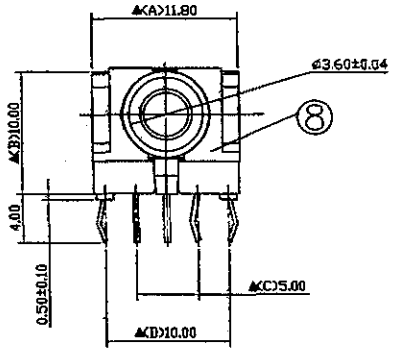

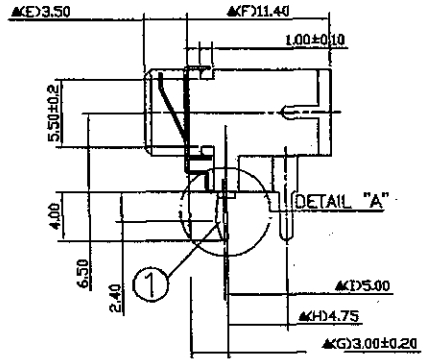

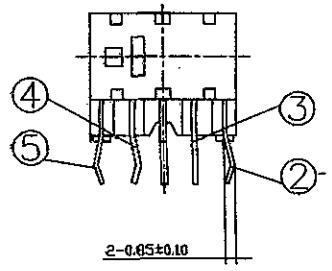

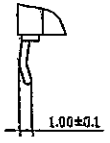

DETAIL "A"(1:1)

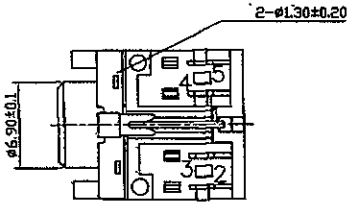

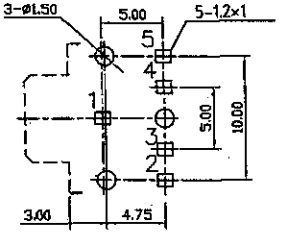

Pin Hole Layout
(Jack Bottom View)

NO.	Description	Material	Q'TY	Finish
6.	Panel Ground	0.20T Stainless Steel	1	
5.	Cover	PBT	1	701C,Pink Color
4.	Housing	PBT	1	701C,Pink Color
3.	Tip Spring	0.25T Phosphor Copper	1	Silver Plated
2.	Ring Spring	0.3T Phosphor Copper	1	Silver Plated
1.	Earth Terminal	0.5T Bronze	1	Silver Plated

DATE	DWN	CHKD
10.10.2011		

PART NAME : 3.5ø PHONE JACK

TOLERANCE :±0.3mm UNLESS OTHERWISE SPECIFIED

UNIT:mm

RoHS Compliant

SPECIFICATIONS:
Contact Resistance : 30mΩ max
Insulation Resistance : 100MΩ min. at DC 500V
Dielectric Withstanding Voltage: AC 500V for one minute
Remark: ▲: The Most Important Dimension

SHOGYO INTERNATIONAL CORP.

 # SCJ363P00(*)S0P04G