SCHEMATIC	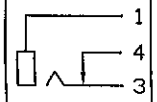
MODEL NO	V

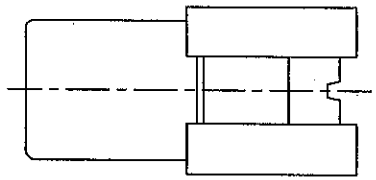

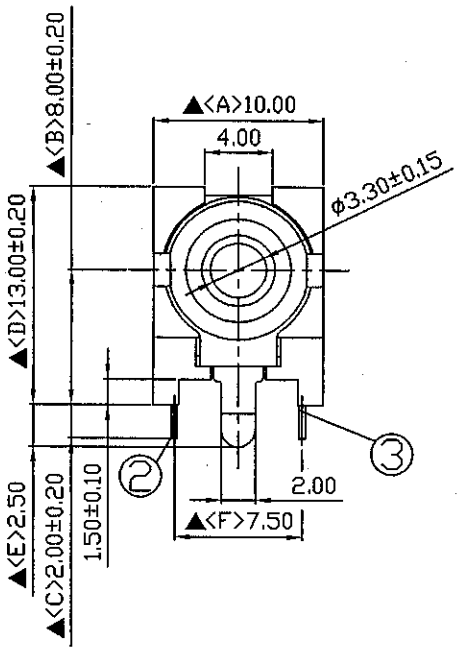

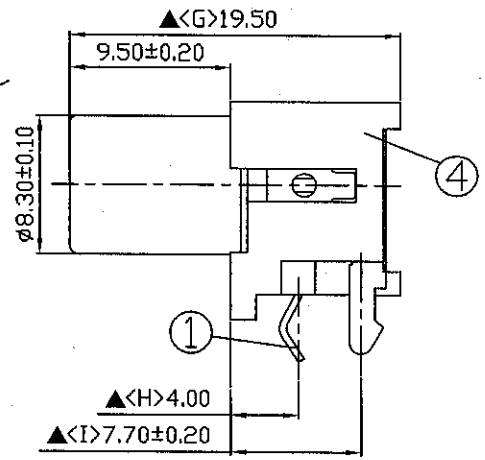

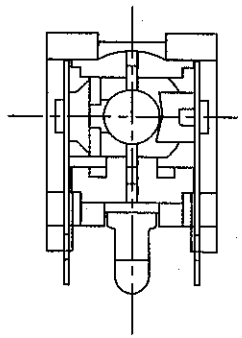

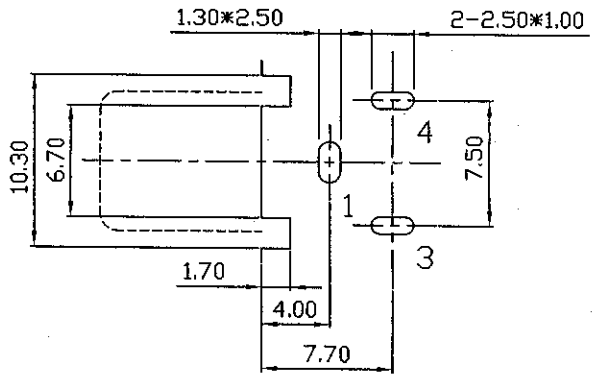

Pin Hole Layout
(Jack Bottom View)

NO.	Description	Material	Q'TY	Finish
4.	Housing	PBT	1	Black Color
3.	Spring Terminal	0.3T Phosphor Bronze	1	Silver Plated
2.	Break Terminal	0.3T Phosphor Bronze	1	Silver Plated
1.	Earth Terminal (Barrel)	0.4T Brass	1	Nickel Plated

	DATE	DWN	CHKD
	12.10.2005		

PART NAME :PIN JACK

TOLERANCE :±0.3mm UNLESS OTHERWISE SPECIFIED UNIT:mm

RoHS Compliant

For Reference 僅供參考

SPECIFICATIONS:

Contact Resistance : 30mΩ max
Insulation Resistance : 100MΩ min. at DC 500V
Dielectric Withstand Voltage : AC 500V for one minute
Remark: ▲: The Most Important Dimension

SHOGYO INTERNATIONAL CORP.

SCP625VNS100000G