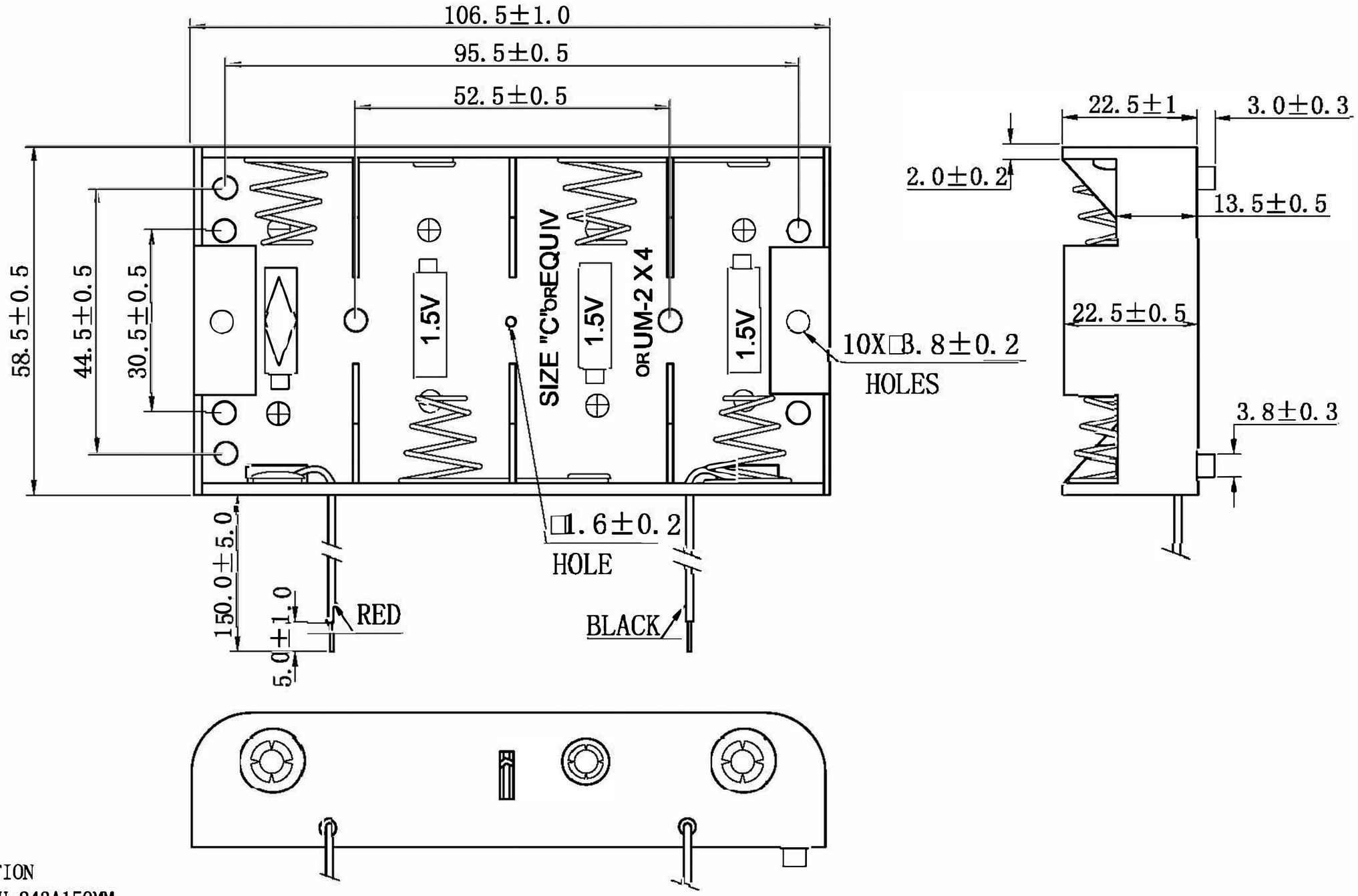

SPECIFICATION

(1) ITEM NO :BH-243A150MM
(2) WIRE: UL1007 AWG#24
BLACK & RED: 150MM±5MM
STRIP & TIN: 5MM±1MM
(3) HOLDER MATERIAL: P.P. RESIN,BLACK COLOR
(4) SPRING MATERIAL: Ø0.8 MM SPRING STEEL NICKEL PLATED
(5) RIVET MATERIAL: BRASS NICKEL PLATED
(6) RoHS COMPLIANT

NO.	MODIFICATION	DATE
3		
2		
1		

General Tolerances			
0 ~ >3	± 0.10	30 ~ >120	± 0.30
3 ~ >6	± 0.10	120~ >400	± 0.50
6 ~ >30	± 0.20	Angle: ± 3°	

The Third Angle Projection

SHOGYO

NAME	BATTERY HOLDER: BH-243A150MM		
SCALE	1:1.5	APPD	
UNIT	MM	CHKD	
MAT'L	AS SPEC.	DWN	
DATE	DEC. 06. 2022	DR NO	BH-243A-1222