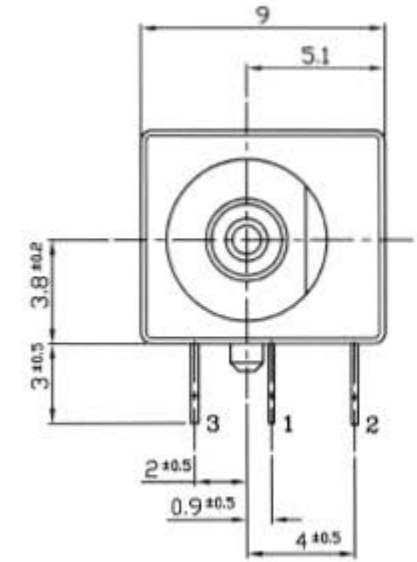

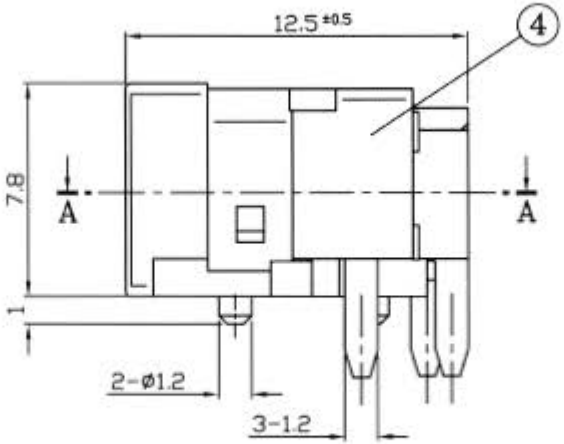

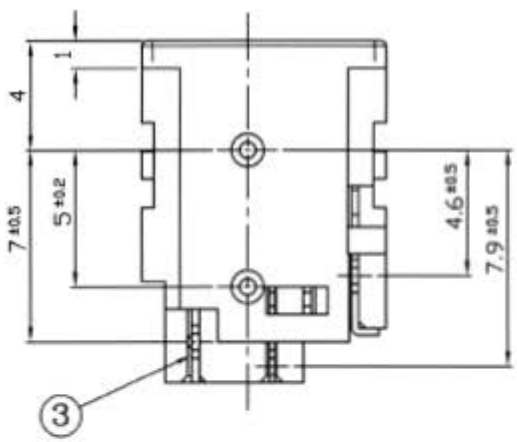

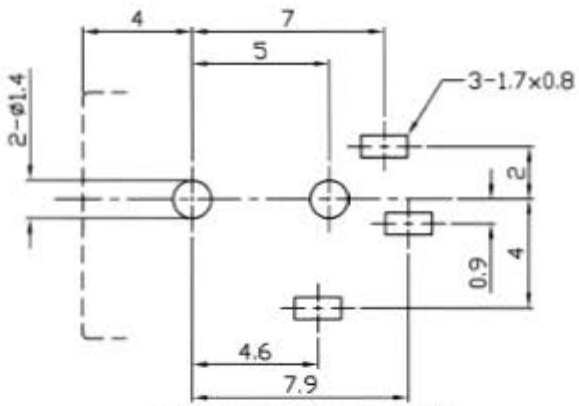

PC BOARD HOLE LAYOUT
(UPPER VIEW FROM DIRECTION OF INSERTION TO PCB)

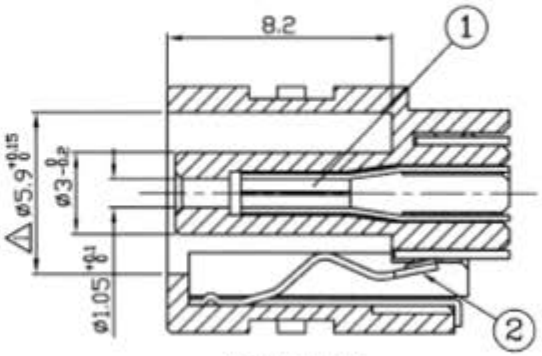

SECTION AA

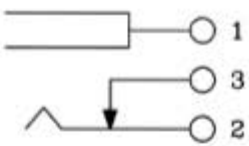

CIRCUIT DIAGRAM

REVISION

LTR	DESCRIPTION	DATE	APPROVED
△	Add dimension ø5.9 +0.15 0	23-06-2011	K.F.IM

LET	PART NAME	QTY	MATERIAL		REMARK
4	CASING	1	PBT/GF RESIN		UL94V-0
3	FIXED TERMINAL	1	BRASS	0.3t	Ag-PLATED
2	TIP SPRING	1	COPPER ALLOY	0.25t	Ag-PLATED
1	EARTH PIN	1	PBs	0.2t	Ag-PLATED

TOLERANCES
X <= 5 = ±0.10
X > 5 = ±0.30
ANGULAR = ±---
DO NOT SCALE DWG.

FINISHED

PART NAME: DC POWER JACK
DWG NO.: M04-390DJ
MATL: AS SHOWN IN TABLE
SCALE: 4/1 mm
DATE
DRN / APPD.

SHOGYO INTERNATIONAL CORPORATION