| REVISION | | | |
|---|---|---|---|
| LTR | DESCRIPTION | DATE | APPROVED |
| | | | |

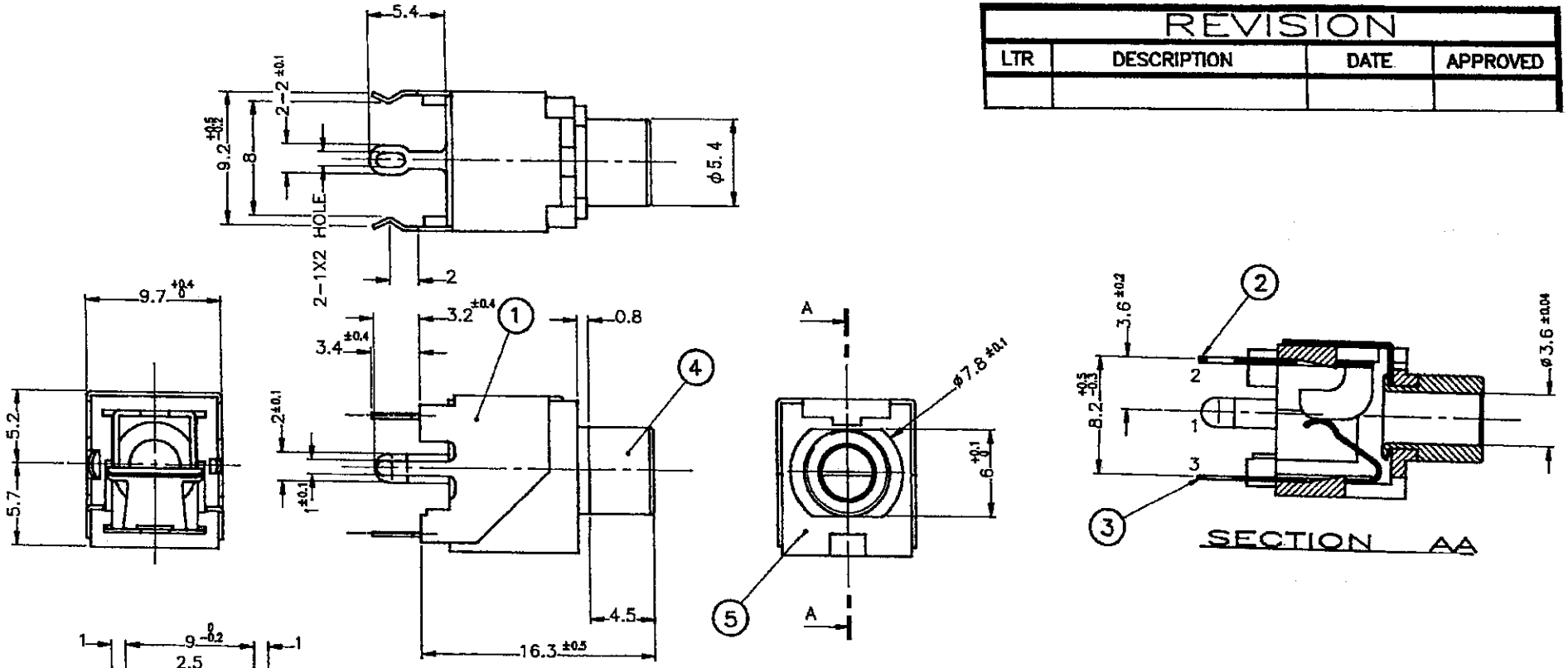


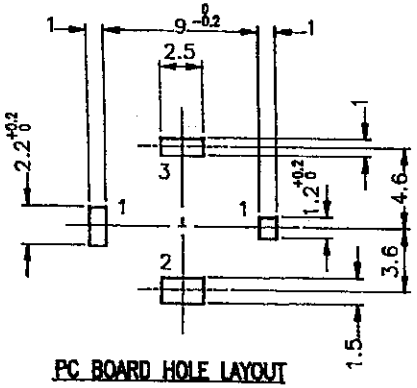


PC BOARD HOLE LAYOUT
(VIEW FROM DIRECTION OF INSERTION TO PCB AND JACK METAL SURFACE)

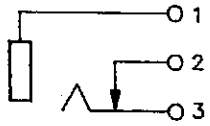


CIRCUIT DIAGRAM

| LET | PART NAME | QTY | MATERIAL | | REMARK |
|---|---|---|---|---|---|
| 5 | JACK CASING | 1 | POLYCARBONATE | — | |
| 4 | BUSH | 1 | BRASS | | Ni-PLATED |
| 3 | TIP SPRING | 1 | PBs | 0.25t | Ag-PLATED |
| 2 | SHUNT TERMINAL | 1 | BRASS | 0.4t | Ag-PLATED |
| 1 | EARTH TERMINAL | 1 | STEEL | 0.3t | Ni-PLATED |

| TOLERANCES | MATL | SCALE |
|---|---|---|
| X <= 5 = ±0.20<br>X > 5 = ±0.30<br>ANGULAR = ±---- | AS SHOWN IN TABLE | 5/2 mm |
| DO NOT SCALE DWG. | DATE 16-6-94 | DRN K.F.IM |
| FINISHED ———— | | |

**SHOGYO INTERNATIONAL CORP.**

**# MJ-1235N**

3.5 EARPHONE JACK