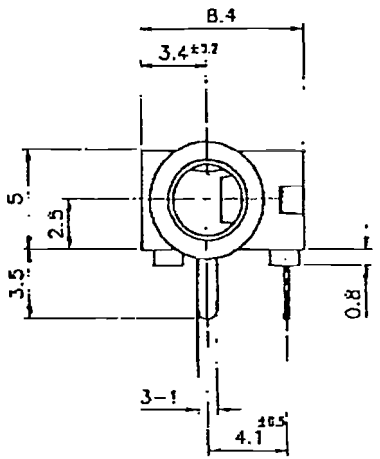

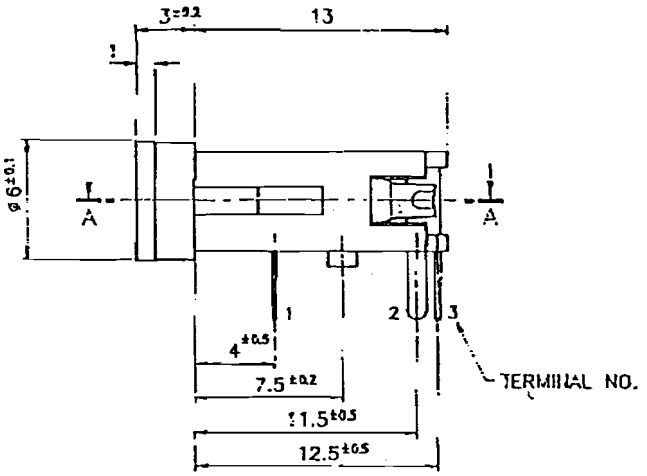

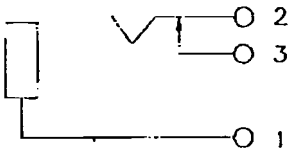

CIRCUIT DIAGRAM

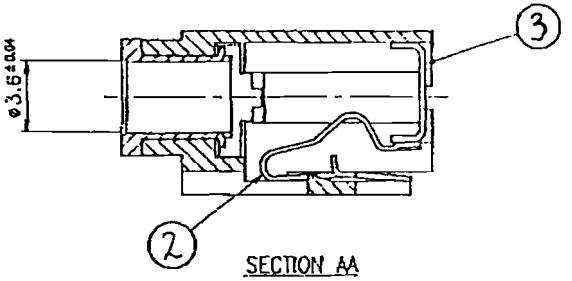

SECTION AA

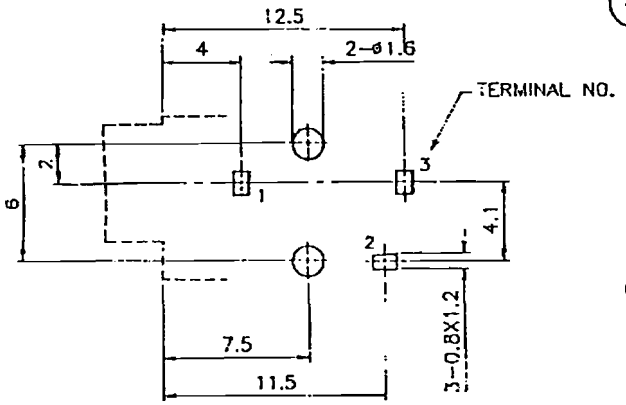

PC BOARD HOLE LAYOUT
(VIEW FROM DIRECTION OF INSERTION TO PCB)

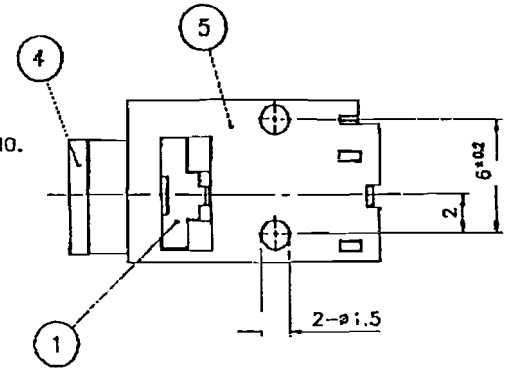

LET	PART NAME	QTY	MATERIAL	REMARK
5	BODY	1	POLYCARBONATE	BLACK
4	METAL BUSH	1	BRASS	Ni-PLATED
3	FIXED TERMINAL	1	BRASS t.3 0.4t	Ag-PLATED
2	TIP SPRING	1	TSB-SH t.1 0.25t	Ag-PLATED
1	EARTH TERMINAL	1	STEEL t.3 0.5t	Ag-PLATED

TOLERANCES	MATL	SCALE
X <= 5 = ±0.10 X > 5 = ±0.30 ANGULAR = ±--- DO NOT SCALE DWG.	AS SHOWN IN TABLE	3/1 mm
FINISHED	DATE 25-9-98	DRN K.F.IM

SHOGYO INTERNATIONAL CORP.

 # MJ-3235