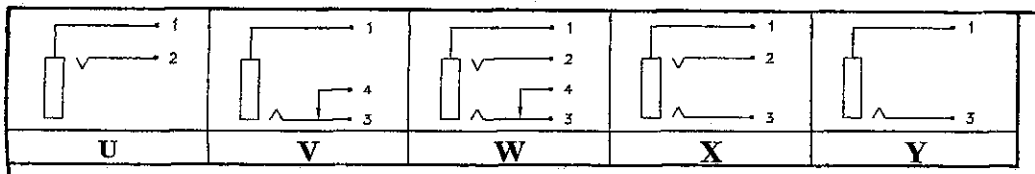

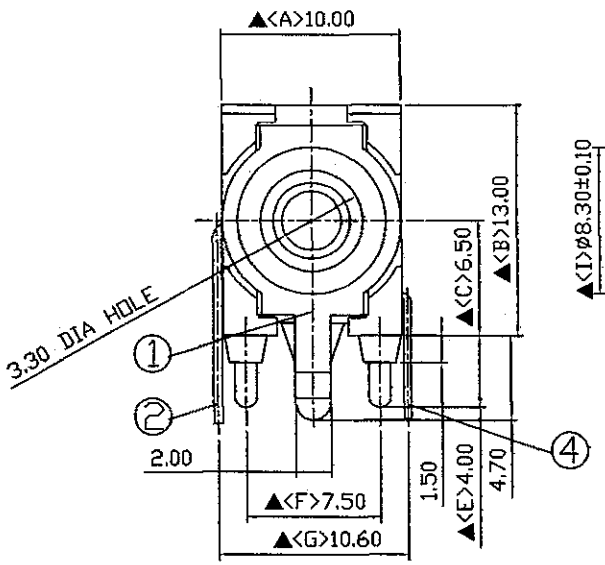

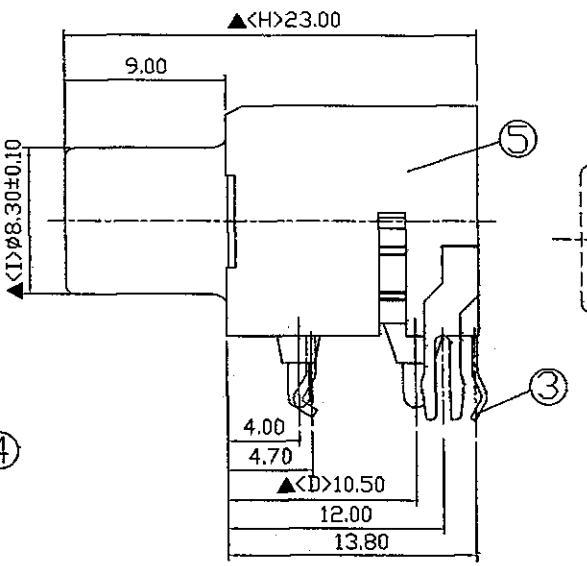

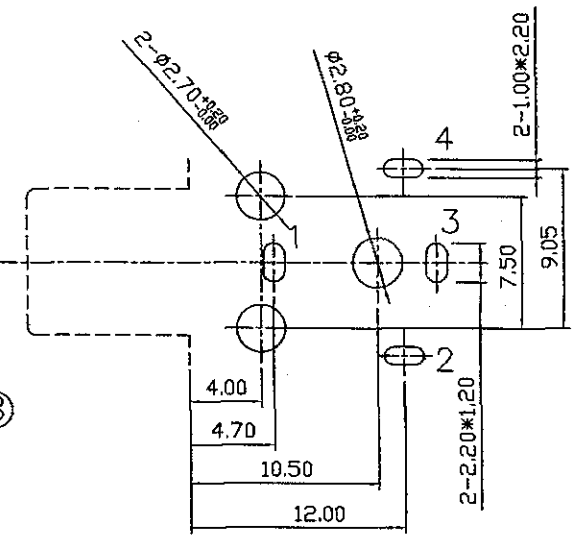

Pin Hole Layout
(Jack Bottom View)

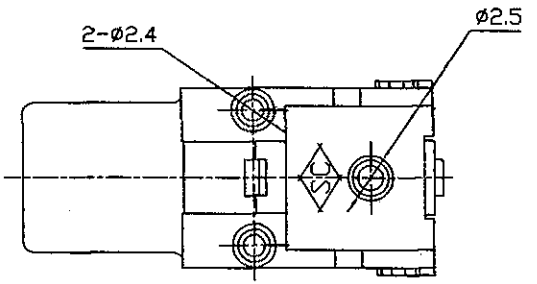

NO.	Description	Material	Q'TY	Finish
5.	Housing	PBT	1	Black Color
4.	Contact	0.4T Brass	1	Silver Plated
3.	Spring Terminal	0.3T Phosphor Bronze	1	Silver Plated
2.	Contact	0.5T Brass	1	Silver Plated
1.	Earth Terminal	0.5T Brass	1	Nicker Plated

DATE	DWN	CHKD
12.10.2005		

PART NAME : PIN JACK

TOLERANCE :±0.3mm UNLESS OTHERWISE SPECIFIED

UNIT:mm

RoHS Compliant

For Reference 僅供參考

SPECIFICATIONS:
Contact Resistance : 30mΩ max
Insulation Resistance : 100MΩ min. at DC 500V
Dielectric Withstand Voltage : AC 500V for one minute
Remark: ▲: The Most Important Dimension

SHOGYO INTERNATIONAL CORP.

 # SCP621(*)NS100000G